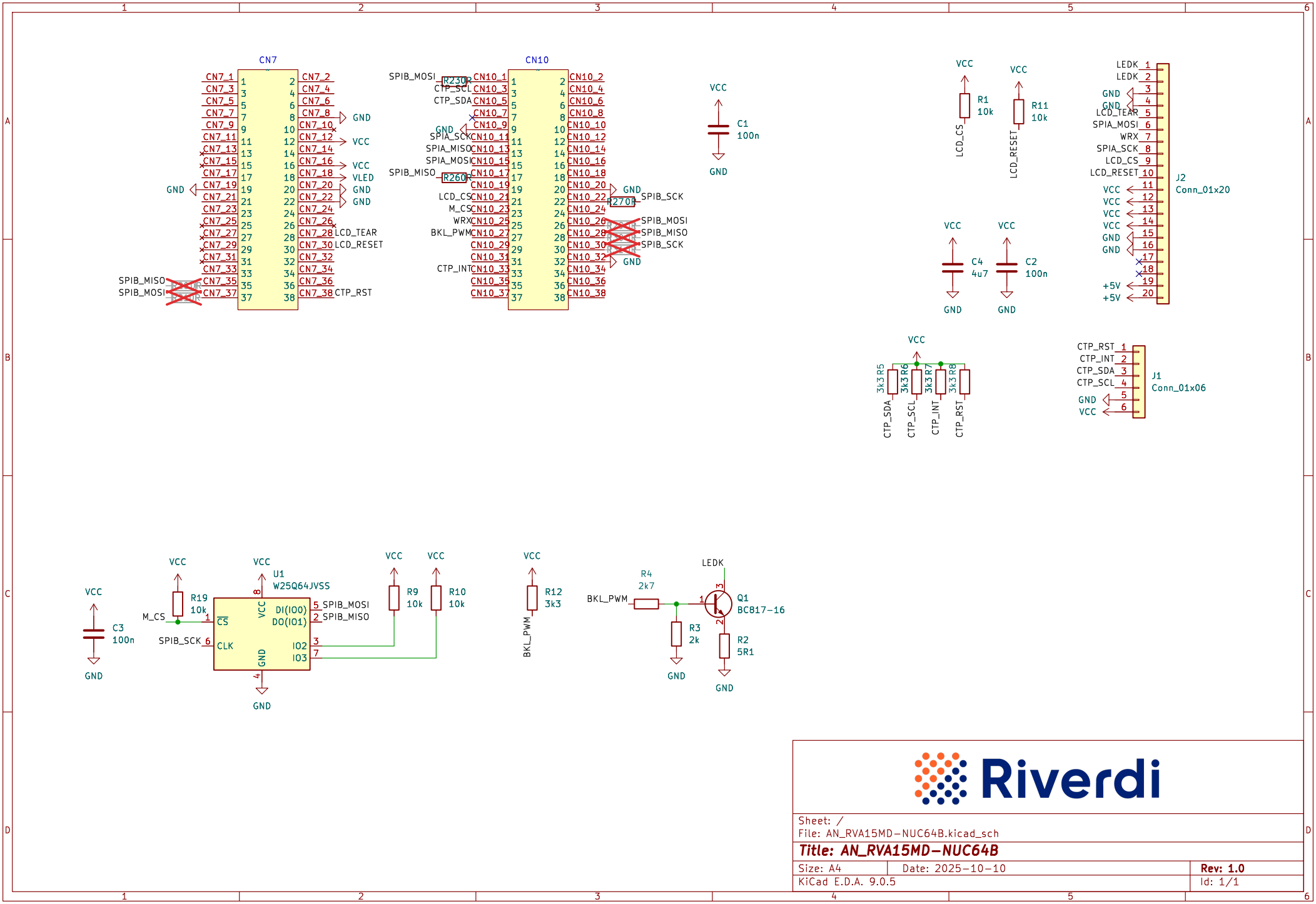
CN7
CN10
R230R
R260R
R270R
C1 100n
R1 10k
R11 10k
C4 4u7
C2 100n
J2 Conn_01x20
3k3 R5
3k3 R6
3k3 R7
3k3 R8
J1 Conn_01x06
C3 100n
R19 10k
U1 W25Q64JVSS
R9 10k
R10 10k
R12 3k3
R4 2k7
R3 2k
R2 5R1
Q1 BC817-16
Riverdi
Sheet: /
File: AN_RVA15MD-NUC64B.kicad_sch
Title: AN_RVA15MD-NUC64B
Size: A4
Date: 2025-10-10
Rev: 1.0
KiCad E.D.A. 9.0.5
Id: 1/1